# Fixpoint console U-profile 120/55 L= 750 mm Plate raw

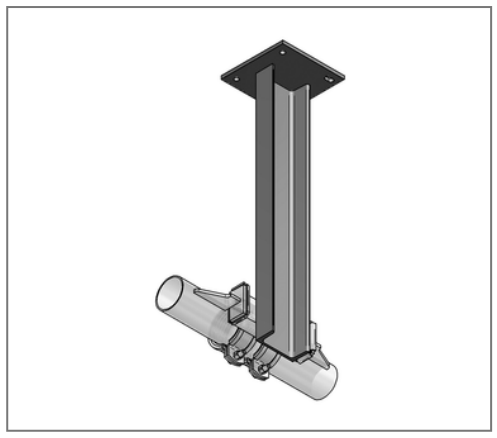

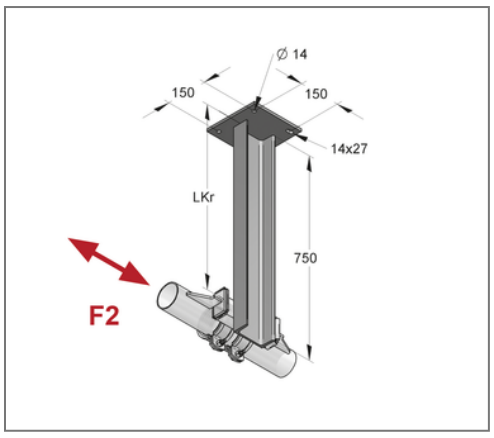


## Commercial details

| | |
|---|---|
| Part no. | 9996491 |
| EAN/GTIN | 4250928446923 |
| Packing unit | 1 pcs |
| Quantity unit | pcs |
| Weight | 13,60 kg/pc |
| Product group | 03-002 |
| Price unit | 1 |

## QR code

## Specification

| | |
|---|---|
| Application area | Fixpoint console for welding to fixpoints. For type A and B. Must be cut to length on site. |
| Specification | The U-shaped steel is welded to the anchor plate on all sides. |

## Technical data

| | |
|---|---|
| Material | Steel |
| Surface | raw |

## Product details

| | |
|---|---|
| Width plate | 200 mm |
| Length plate | 200 mm |
| Hole distance | 150 mm |
| Plate thickness | 10 mm |
| Width profile | 120 mm |
| Profile height | 55 mm |
| Length console LKr | 750 mm |
| Elongated hole plate | 14x27 mm |

## Remark

| | |
|---|---|
| Delivery time | 5 working days, ex works |

MEFA Befestigungs- und Montagesysteme GmbH | Schillerstraße 15 | 74635 Kupferzell
+ 49 7944 64 0 | info@mefa.de | www.mefa.de