# Insulated fixpoint HV 3 219,1 mm Insulation 40 mm Shell length 204 mm

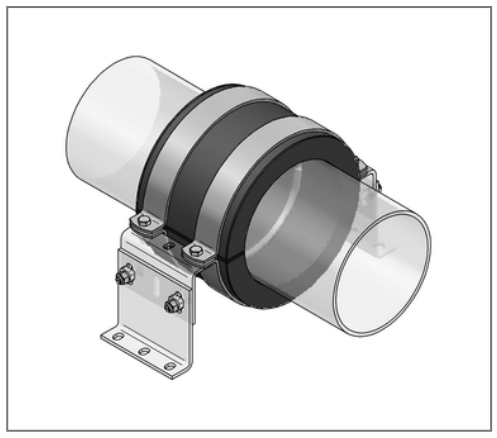

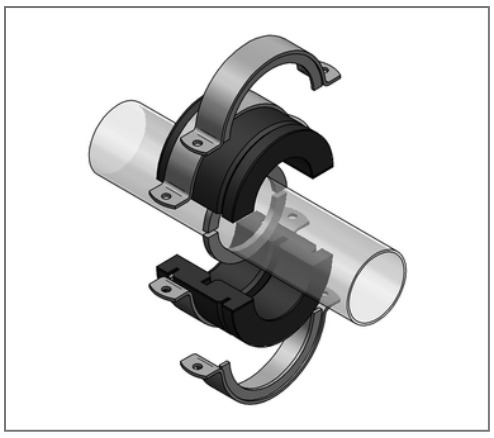

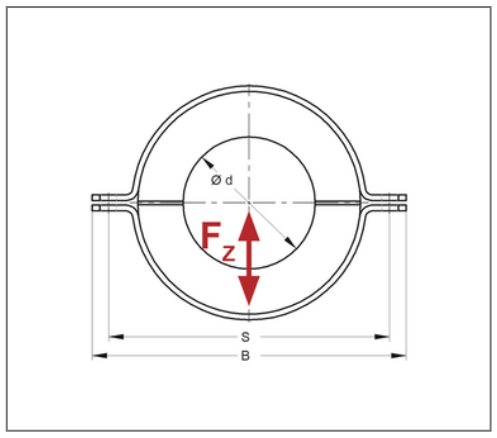


## Commercial details

| | |
|---|---|
| Part no. | 698400219 |
| EAN/GTIN | 4250928441188 |
| Packing unit | 1 pcs |
| Quantity unit | pcs |
| Weight | 8,27 kg/pc |
| Product group | 03-698 |
| Price unit | 1 |

## QR code

## Specification

| | |
|---|---|
| Application area | Insulated fixpoint mounting of chilled water pipes of steel. |
| Specification | With natural rubber on front ends, high water vapor diffusion resistance and low thermal conductivity and acc. AGI requirements. |
| Scope of delivery | 2 x half shell with slot for inner and outer split ring, 2 x inner split ring for welding to steel pipe, 4 x outer split ring for fixation on substructure |

## Technical data

| | |
|---|---|
| Material | PU |
| min. temperature resistance | -50 °C |
| max. temperature resistance | 105 °C |
| Density | 200 kg/m³ |

## Product details

| | |
|---|---|
| Insulation thickness | 40 mm |
| Outer pipe diameter | 219,1 mm |
| Hole distance S | 349 mm |
| Thermal conductivity | 0,037 W/mK |
| Length shell L | 204 mm |
| Width outer split ring B | 378 mm |
| Recommended base | HV3 |
| Load $F_Y$ | 8 kN |
| Load $F_Z$ | 12,4 kN |

MEFA Befestigungs- und Montagesysteme GmbH | Schillerstraße 15 | 74635 Kupferzell
+ 49 7944 64 0 | info@mefa.de | www.mefa.de