Spring hanger FH 2 - 4300 plus F 0 - 4301 N max. spring deflection 29 mm

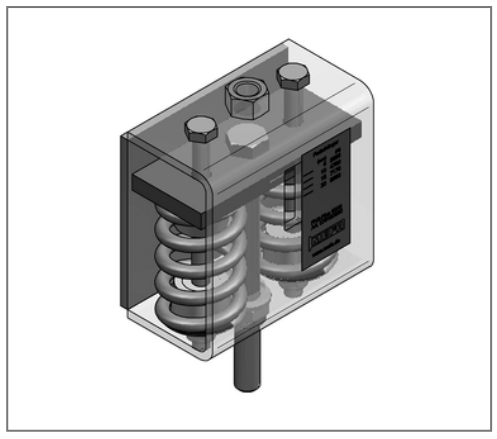

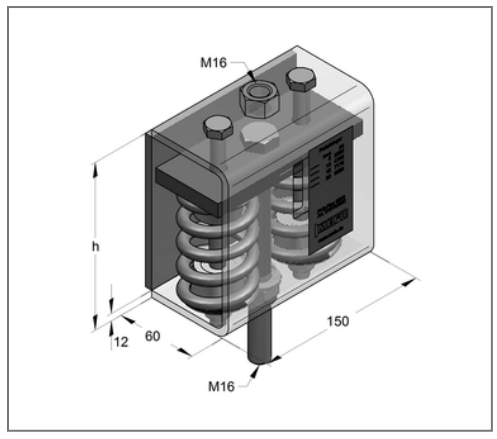

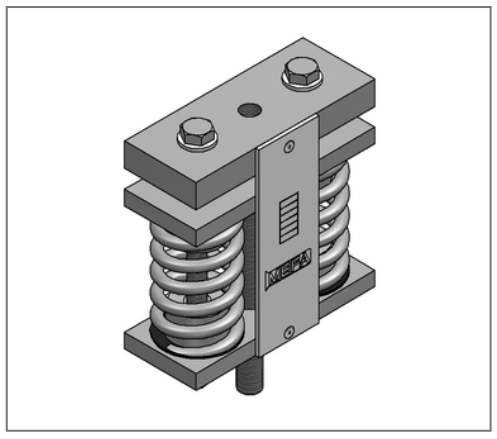

Commercial details

Part no.	079170430
EAN/GTIN	4250928449191
Packing unit	1 pcs
Quantity unit	pcs
Weight	5,09 kg/pc
Product group	03-079
Price unit	1

QR code

Specification

Application area	Spring isolators as flexible pipe hangers or for elastic mounting of aggregates.
Number of springs	2

Technical data

Material	Steel
Material type	S235
Surface	galvanized
Corrosion category	C2 very high
Surrounding area	Indoor area

Product details

Connection	M16
Width b	80 mm
Height h	140 mm
Length t	140 mm
Spring rate	150,92 N/mm
max. spring deflection	29 mm
max. load range	4301 N

MEFA Befestigungs- und Montagesysteme GmbH | Schillerstraße 15 | 74635 Kupferzell
+ 49 7944 64 0 | info@mefa.de | www.mefa.de