Spring bearing FL Type 1 - 700 F 0 - 682 N max. spring deflection 26,5 mm

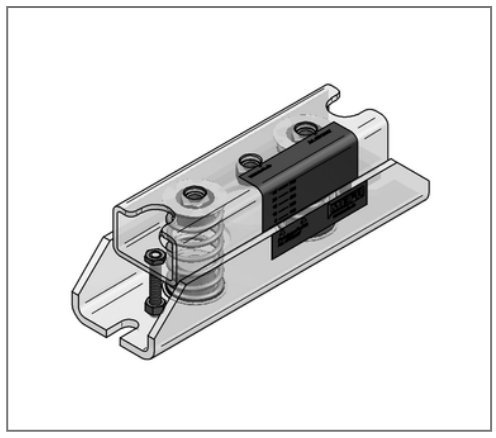

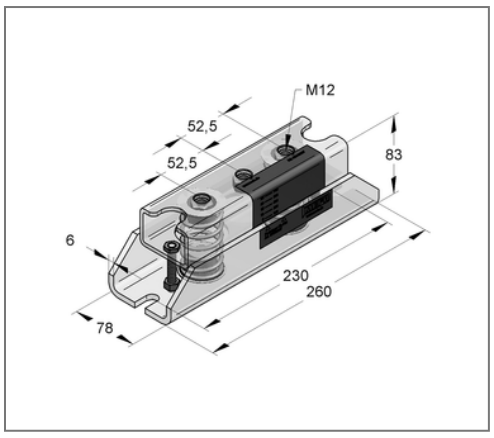

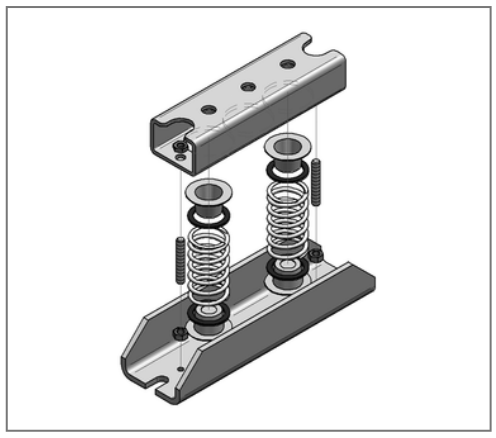

Commercial details

Part no.	07919007
EAN/GTIN	4250928419002
Packing unit	1 pcs
Quantity unit	pcs
Weight	3,05 kg/pc
Product group	03-079
Price unit	1

QR code

Specification

Application area	Spring isolators for the elevation of piping or aggregates.
Number of springs	2

Technical data

Material	Steel
Material type	S235
Surface	galvanized
Corrosion category	C2 very high
Surrounding area	Indoor area

Product details

Connection	M12
Width	78 mm
Height	83 mm
Length	260 mm
Spring rate	25,74 N/mm
max. spring deflection	26,5 mm
max. load range	682 N

MEFA Befestigungs- und Montagesysteme GmbH | Schillerstraße 15 | 74635 Kupferzell
+ 49 7944 64 0 | info@mefa.de | www.mefa.de