Insulated pipe clamp Husky IV 19 21,3 mm Insulation 19,9 M8/M10

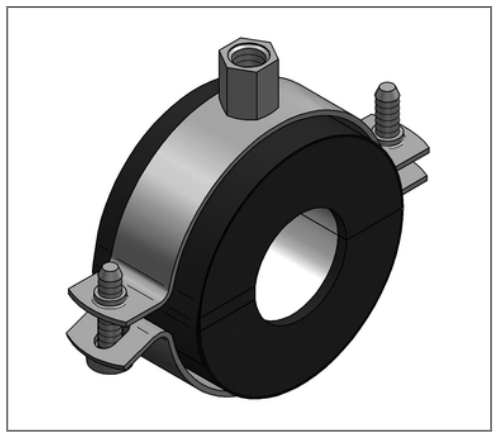

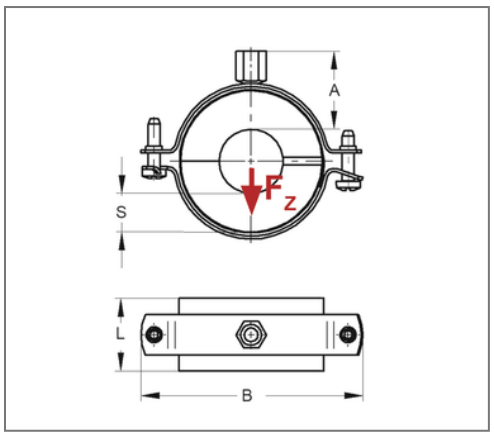

Commercial details

Part no.	6840220
EAN/GTIN	4250928440693
Packing unit	12 pcs
Quantity unit	pcs
Weight	0,107 kg/pc
Product group	06-684
Price unit	1

QR code

Certification

SCHALL-SCHUTZ DIN 4109

Baustoffklasse B2 "Normal entflammbar" nach DIN 4102

Specification

Application area	A thermal decoupled mounting of tubes guarantees a reliable prevention of condensate for refrigeration, air-conditioning and drinking water technologies in the sector pipe-clamping.
Insulation body	KA/PU

Technical data

Material	Steel
Material type	DD11
Material coat	Plastic
Surface	galvanized
Corrosion category	C2 very high
Surrounding area	Indoor area
Class	B2
min. temperature resistance	-45 °C
max. temperature resistance	105 °C
Thermal conductivity	0,029 W/mK
Density shell	120 kg/m³
Water vapour diffusion resistance	20000 µ

Product details

Connection	M8/M10
Connection height A	39 mm
Width B	102 mm
Insulation thickness	19,9 mm
Load F_Z	0,15 kN
Length shell L	36 mm
Statical load shell	0,27 N/mm²

Remark

Notice exchange and returns are excluded. Special design on request.

MEFA Befestigungs- und Montagesysteme GmbH | Schillerstraße 15 | 74635 Kupferzell
+ 49 7944 64 0 | info@mefa.de | www.mefa.de