CENTUM® Direct connector M10

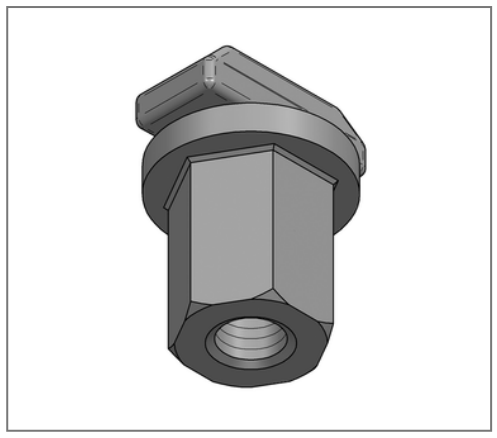

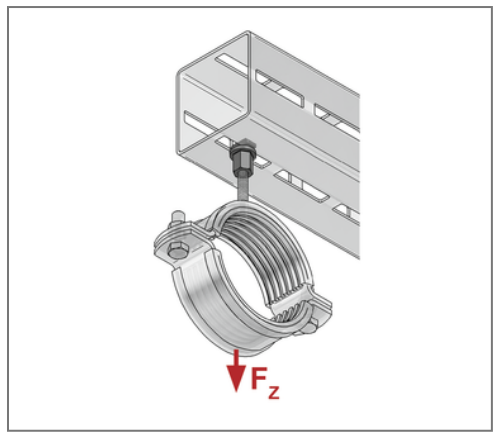

Commercial details

Part no.	1640016010
EAN/GTIN	4250928450500
Packing unit	50 pcs
Quantity unit	pcs
Weight	0,0714 kg/pc
Product group	14-164
Price unit	1

QR code

Certification

TSP®

Specification

Application area	A quick way to create threaded connections.
Thread	M10
Profile type	C-profile 45 from material thickness 2,5 mm, XL 80, XL 100, XL 120, XL 200

Technical data

Material	Steel
Surface	Zinc-Nickel
Corrosion category	C4 high / C5 medium

Product details

Wrench size	17
Height collar nut	25 mm
Tightening torque	25 Nm
Load F_Z	3 kN

MEFA Befestigungs- und Montagesysteme GmbH | Schillerstraße 15 | 74635 Kupferzell
+ 49 7944 64 0 | info@mefa.de | www.mefa.de