Pipe clamp Omnia MB ZnNi 20x1,5 22 - 28 mm M8/M10 TPE

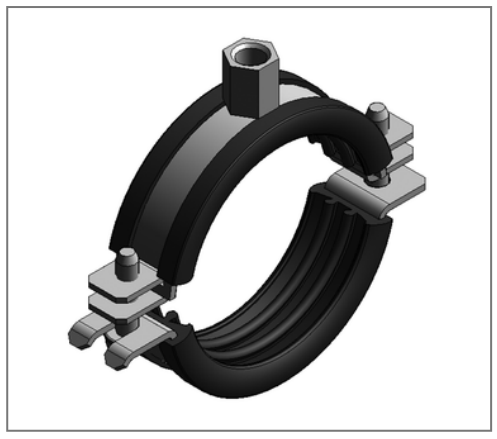

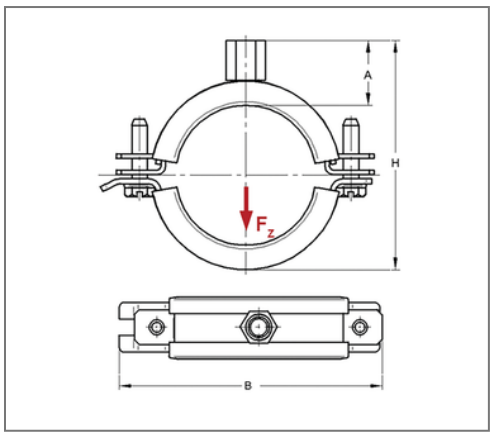

Commercial details

Part no.	0398028/zn
EAN/GTIN	4250928456052
Packing unit	100 pcs
Quantity unit	pcs
Weight	0,0860 kg/pc
Product group	01-039
Price unit	100

QR code

Certification

Specification

Application area	Pipe clamp for fastening pipes.
Specification	two-part
Connection	M8/M10
Closure	Slewable U-closure

Technical data

Material	Steel
Material type	DD11
Surface	Zinc-Nickel
Corrosion category	C4 high / C5 medium
Surrounding area	Indoor and outdoor areas
Insulation thickness	6 mm
Temperature resistance	-35 °C - 100 °C
Sound insulation lining	TPE

Product details

Connection height A	24 mm
Width B	68 mm
Colour sound insulation lining	black
Height H	49 - 56 mm
Material dimension	20x1,5 mm
Load F_Z	1 kN
Clamping range	22 - 28 mm
Outside pipe diameter val.Rohraußendurchmesser inch	Zoll.1/2-3/4 inch
Closure screw	M6

Remark

Notice	Silicon sound insulation on request

MEFA Befestigungs- und Montagesysteme GmbH | Schillerstraße 15 | 74635 Kupferzell
+ 49 7944 64 0 | info@mefa.de | www.mefa.de