Distance tube with male thread 1/2” x 100 mm galv.

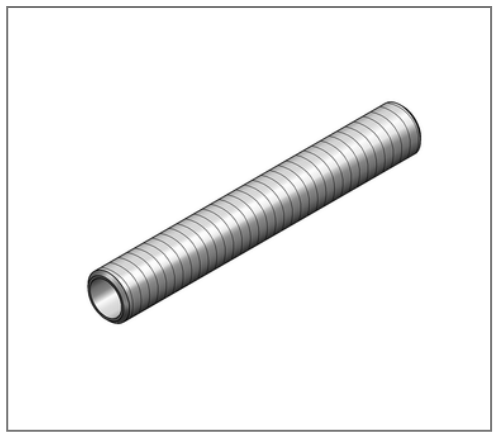

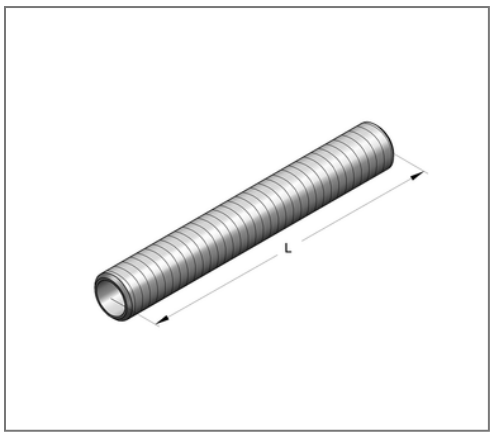

Commercial details

Part no.	07070100
EAN/GTIN	4250928456748
Packing unit	10 pcs
Quantity unit	pcs
Weight	0,112 kg/pc
Product group	05-070
Price unit	1

QR code

Technical data

Material	Steel
Surface	galvanized
Corrosion category	C2 very high
Surrounding area	Indoor area

Product details

Thread	1/2”
Length L	100 mm

MEFA Befestigungs- und Montagesysteme GmbH | Schillerstraße 15 | 74635 Kupferzell
+ 49 7944 64 0 | info@mefa.de | www.mefa.de