Profile rail C-profile V4A 45 / 45 / 2 mm L= 6 m

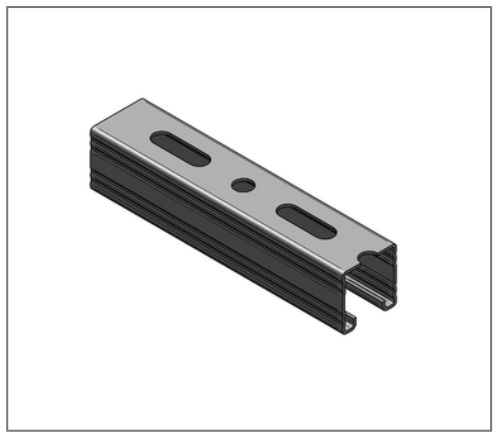

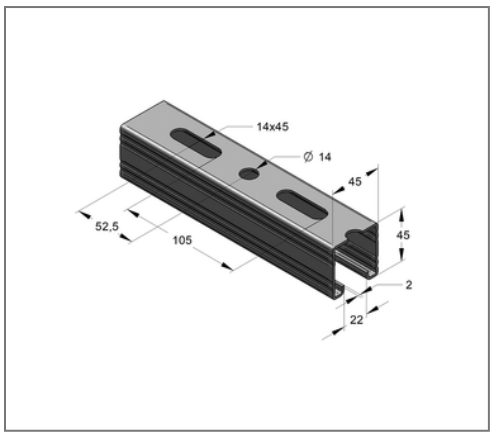

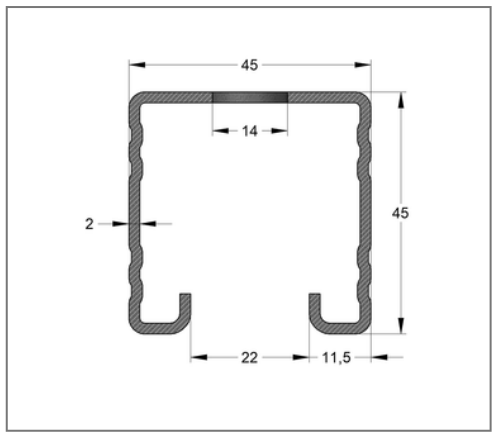

Commercial details

Part no.	080015501
EAN/GTIN	4250928456793
Packing unit	30 m
Bundle	240 m
Quantity unit	m
Weight	2,50 kg/m
Product group	13-054
Price unit	1

QR code

Certification

Specification

Specification	untoothed, perforated

Technical data

Material	Stainless steel
Material type	V4A
Surrounding area	Indoor and outdoor areas

Product details

Width	45 mm
Height	45 mm
Thickness	2 mm
Length	6 m
Hole-Ø	14 mm
Elongated hole	14x45 mm
Area (least cross section of the profile rail)	2,86 cm²
Axial angular impulse I_Y	7,46 cm4
Axial angular impulse I_Z	10,38 cm4
Grid dimension	105,0 mm
Rail slot width	22 mm
Centroid distance eo	2,27 cm
Centroid distance eu	2,22 cm
Centroid distance ez	2,25 cm
Elastic limit	240 N/mm²

Remark

Notice	Full bundle, only

MEFA Befestigungs- und Montagesysteme GmbH | Schillerstraße 15 | 74635 Kupferzell
+ 49 7944 64 0 | info@mefa.de | www.mefa.de

Product details

Radius of inertia iy	1,62 cm
Radius of inertia iz	1,91 cm
Section modulus W_Y	3,28 cm³
Section modulus W_Z	4,61 cm³

MEFA Befestigungs- und Montagesysteme GmbH | Schillerstraße 15 | 74635 Kupferzell
+ 49 7944 64 0 | info@mefa.de | www.mefa.de