Clamping bow M10 45 V4A Profile height 26 - 45 Clamping thickness 26 mm

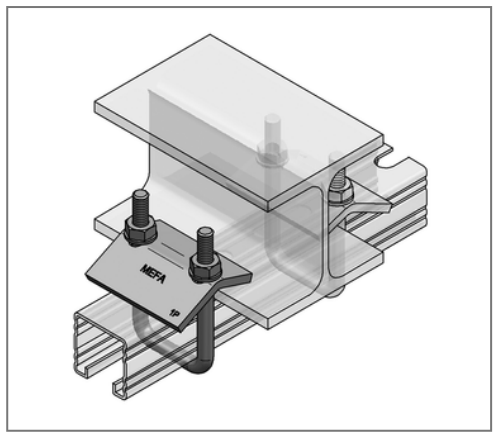

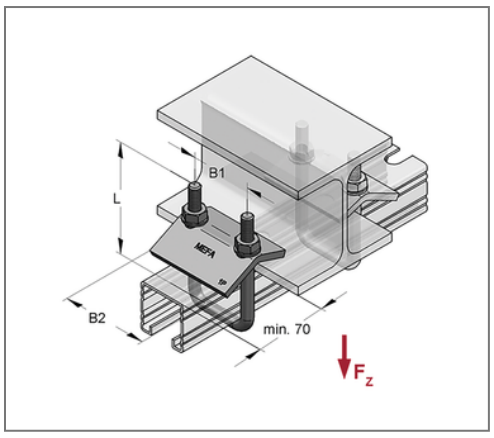

Commercial details

Part no.	0481690
EAN/GTIN	4250928459107
Packing unit	1 pcs
Quantity unit	pcs
Weight	0,401 kg/pc
Product group	13-054
Price unit	1

QR code

Certification

Specification

Application area	For mounting of C-profile rail on steel girder and possible connection to OPTIMUM XLV®.
Profile type	45

Technical data

Material	Stainless steel
Material type	V4A
Surrounding area	Indoor and outdoor areas

Product details

Load F_Z	4 kN
Thread	M10
max. clamping thickness	26 mm
Tightening torque	15 Nm
Profile height	26 - 45 mm
Center distance U-bolt B1	56 mm
Width tensioning bracket B2	80 mm
Length U-bolt L	90 mm
min. edge distance	70 mm