Turnbuckle nut M10 SW 17

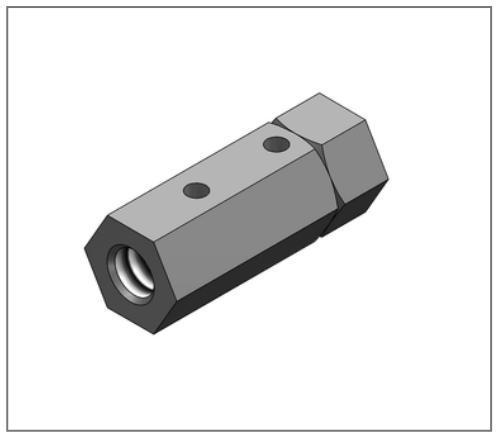

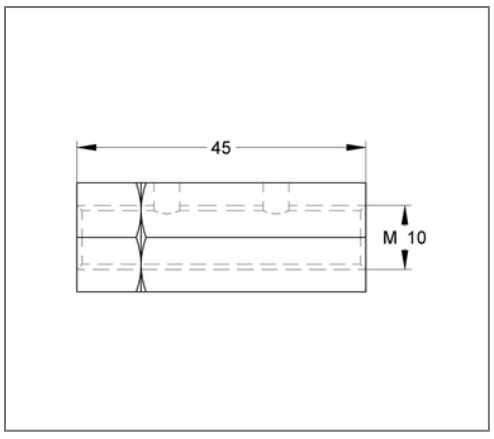

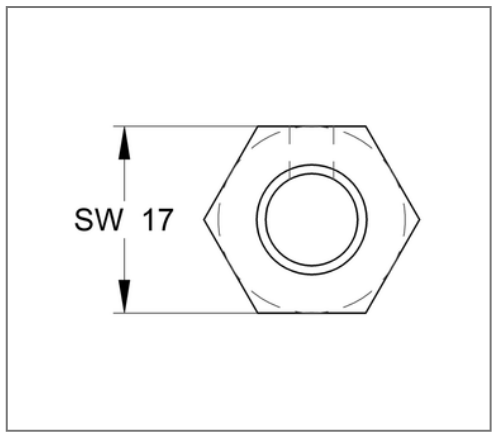

Commercial details

Part no.	08120760
EAN/GTIN	4250928459268
Packing unit	10 pcs
Quantity unit	pcs
Weight	0,0580 kg/pc
Product group	02-081
Price unit	1

QR code

Specification

Application area	Adjustment of tensioning.

Technical data

Material	Steel
Surface	galvanized
Corrosion category	C2 very high
Surrounding area	Indoor area
Norm	DIN 1479

Product details

Thread M	M10
Wrench size SW	17
Tension load	11 kN

MEFA Befestigungs- und Montagesysteme GmbH | Schillerstraße 15 | 74635 Kupferzell
+ 49 7944 64 0 | info@mefa.de | www.mefa.de