Stex 45 mounting plate MP-X V4A M12

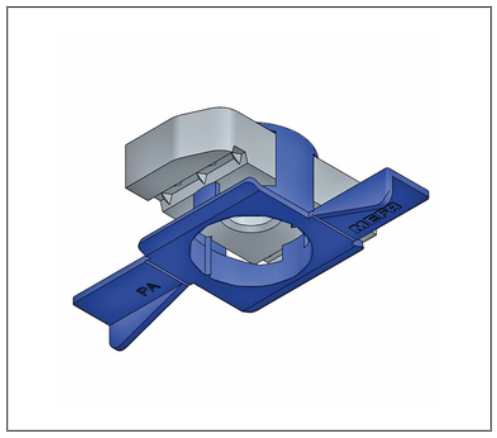

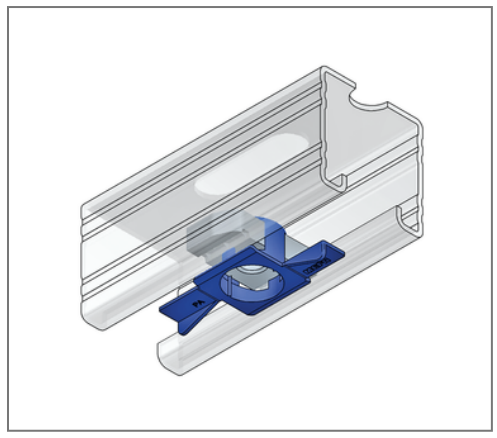

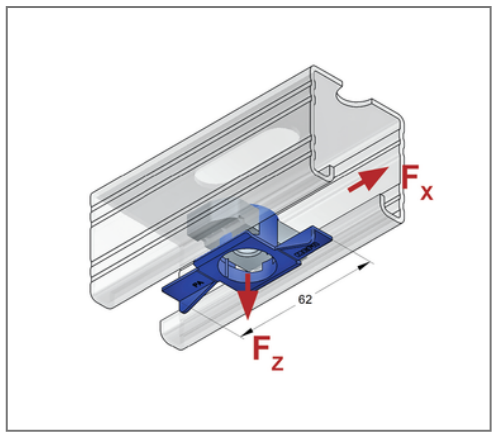

Commercial details

Part no.	0481602
EAN/GTIN	4250928459336
Packing unit	30 pcs
Quantity unit	pcs
Weight	0,0452 kg/pc
Product group	13-054
Price unit	1

QR code

Certification

Technical data

Material	Stainless steel
Material type	V4A
Surrounding area	Indoor and outdoor areas
Material cage	Plastic
Materialname cage	Polyamide 6

Product details

Length	38 mm
Width	62 mm
Thread	M12
Profile type	45
Shape	pivoted

MEFA Befestigungs- und Montagesysteme GmbH | Schillerstraße 15 | 74635 Kupferzell
+ 49 7944 64 0 | info@mefa.de | www.mefa.de