Beam clamp Steel PKB 8 Clamping range 2 - 20 mm Hole for M8

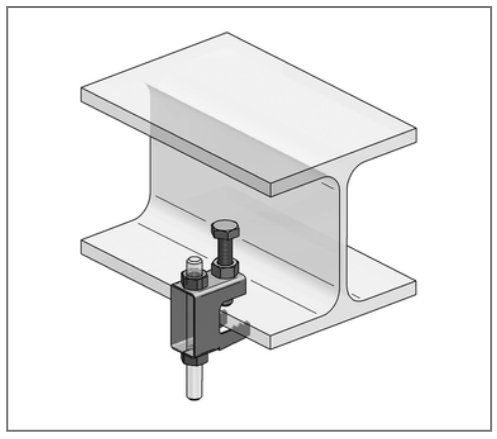

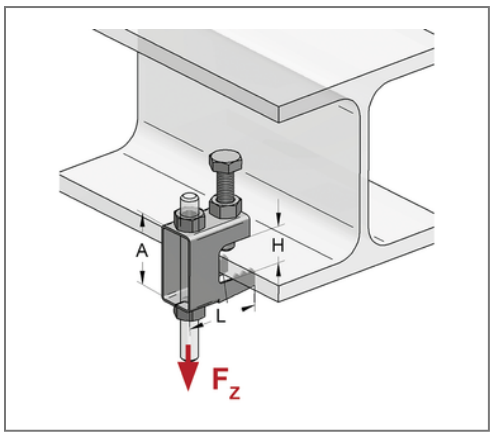

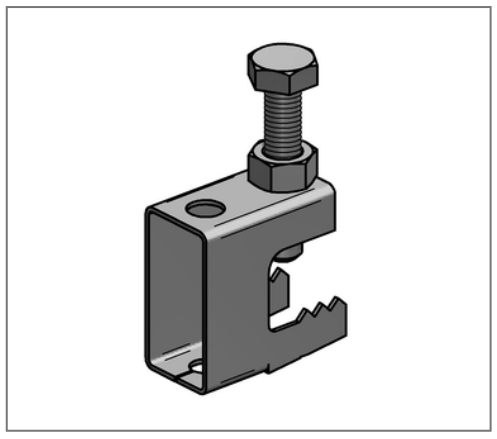

Commercial details

Part no.	0576801
EAN/GTIN	4250928459022
Packing unit	50 pcs
Quantity unit	pcs
Weight	0,0491 kg/pc
Product group	05-057
Price unit	1

QR code

Certification

VdS

Specification

Brand	Jiangmen Eurofix
Application area	Fast and simple mounting at steel structures and profiles.
Type of attachment	with pass hole
Scope of delivery	Beam clamp, hexagon head screw with lock

Technical data

Material	Steel
Surface	galvanized
Corrosion category	C2 very high
Surrounding area	Indoor area
min. clamping thickness H	2 mm
max. clamping thickness H	20 mm

Product details

Height A	37 mm
Load F_Z	1,2 kN
Thread	for M8
Hole-Ø	9 mm
Length L	38 mm