Pipe clamp Trabant Inox 20x1,5 48 - 52 mm M8/M10 TPE

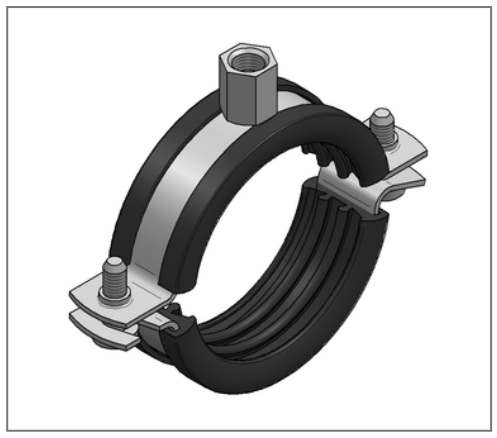

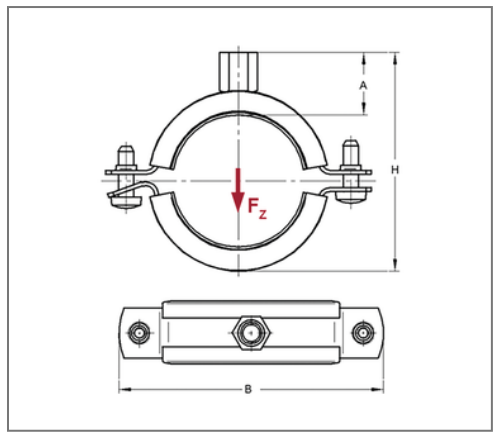

Commercial details

Part no.	051003052
EAN/GTIN	4250928453891
Packing unit	50 pcs
Quantity unit	pcs
Weight	0,103 kg/pc
Product group	13-051
Price unit	100

QR code

Certification

Specification

Application area	Pipe clamp for fastening pipes.
Specification	two-part
Connection	M8/M10
Closure	Snap-in closure

Technical data

Material	Stainless steel
Material type	V4A
Surrounding area	Indoor and outdoor areas
Insulation thickness	4,5 mm
Temperature resistance	-35 °C - 100 °C
Sound insulation lining	TPE

Product details

Center distance S	80,5 mm
Connection height A	22,5 mm
Width B	98 mm
Colour sound insulation lining	black
Height H	76 - 81 mm
Material dimension	20x1,5 mm
Load F_Z	0,6 kN
Clamping range	48 - 52 mm
Outside pipe diameter inch	val.RohraußendurchmesserZoll.1 1/2 inch
Closure screw	M6

Remark

Delivery time	2 working days, ex works
Notice	Other sizes and connection threads on demand.

MEFA Befestigungs- und Montagesysteme GmbH | Schillerstraße 15 | 74635 Kupferzell
+ 49 7944 64 0 | info@mefa.de | www.mefa.de