# Sound-decoupling set for Type III Connection Plate 137x70x6 mm

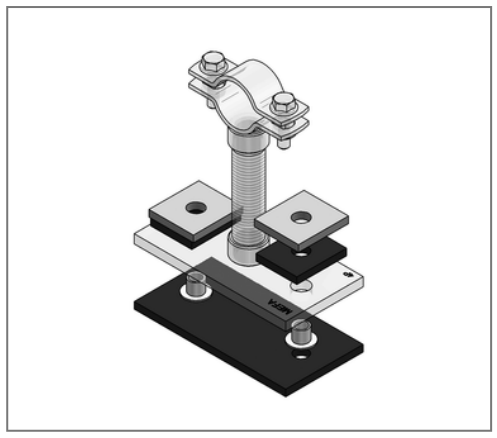

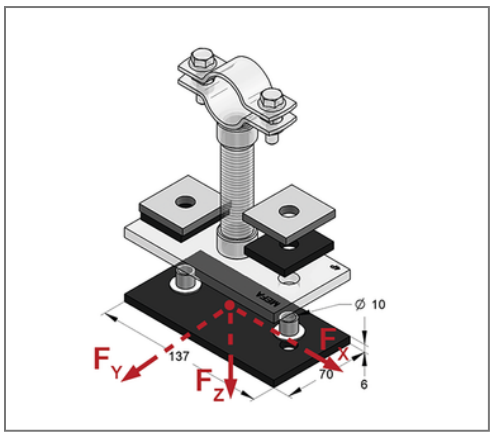


## Commercial details

| | |
|---|---|
| Part no. | 077034002 |
| EAN/GTIN | 4250928463302 |
| Packing unit | 1 pcs |
| Quantity unit | pcs |
| Weight | 0,257 kg/pc |
| Product group | 03-002 |
| Price unit | 1 |

## QR code

## Certification

SCHALL-SCHUTZ DIN 4109

## Specification

| | |
|---|---|
| Specification | Suitable for base plate type III. |

## Technical data

| | |
|---|---|
| Material | Rubber |
| Material type | S235 |
| Surface | Zinc-Nickel |
| Corrosion category | C4 high / C5 medium |
| Surrounding area | Indoor and outdoor areas |

## Product details

| | |
|---|---|
| Length | 137 mm |
| Width | 70 mm |
| Thickness | 6 mm |
| Load $F_Z$ | 10 kN |

## Remark

Note Sound-decoupling set K suitable for base plate type III or holder 45.

MEFA Befestigungs- und Montagesysteme GmbH | Schillerstraße 15 | 74635 Kupferzell
+ 49 7944 64 0 | info@mefa.de | www.mefa.de