Stex 45 mounting plate MP-S M12 ZnNi

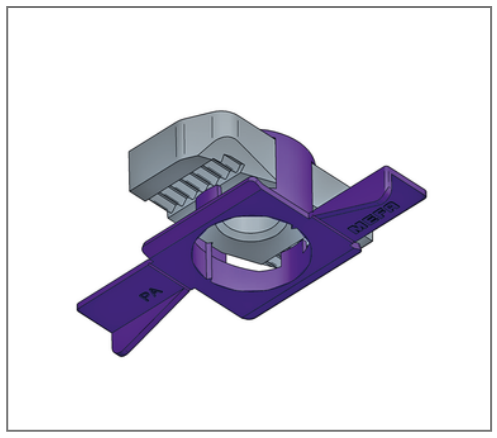

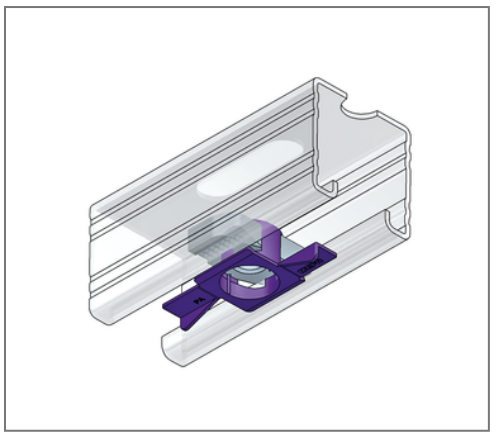

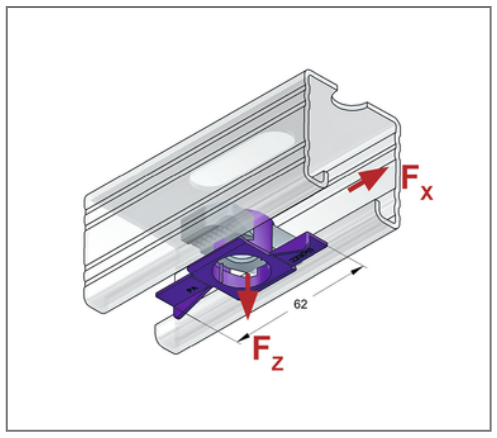

Commercial details

Part no.	081810601
EAN/GTIN	4250928469663
Packing unit	50 pcs
Quantity unit	pcs
Weight	0,0441 kg/pc
Product group	02-081
Price unit	1

QR code

Certification

TSP®

Technical data

Material	Steel
Material type	S235
Surface	Zinc-Nickel
Corrosion category	C4 high / C5 medium
Surrounding area	Indoor and outdoor areas
Material cage	Plastic
Materialname cage	Polyamide 6

Product details

Loading capacity	see loads in the cataloge
Length	38 mm
Width	62 mm
Thread	M12
Profile type	45
Shape	pivoted

MEFA Befestigungs- und Montagesysteme GmbH | Schillerstraße 15 | 74635 Kupferzell
+ 49 7944 64 0 | info@mefa.de | www.mefa.de