OPTIMUM XLV® 3D-joint Angle - °

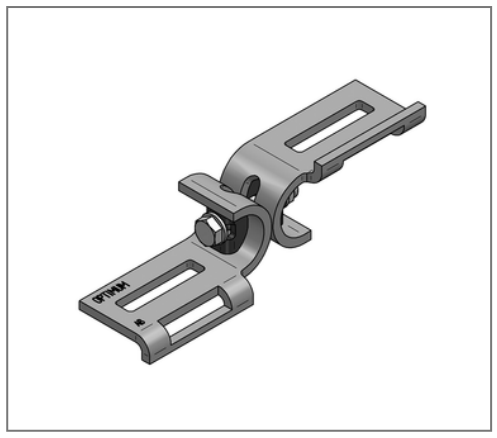

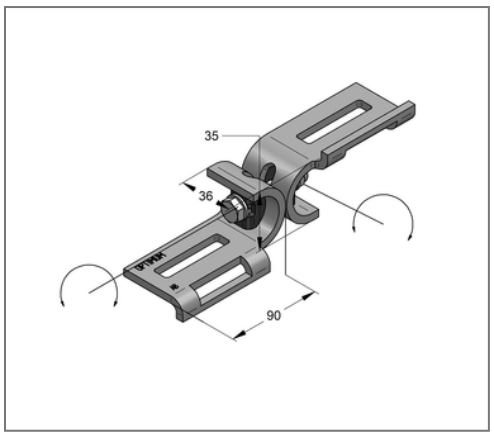

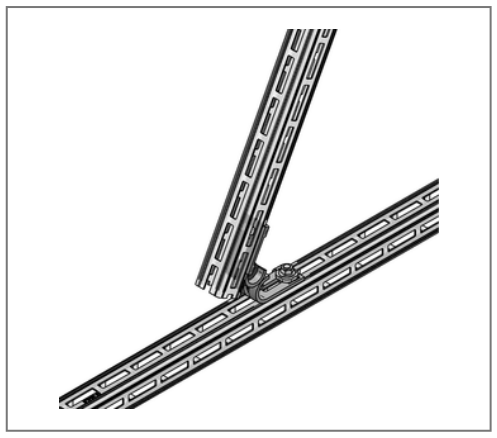

Commercial details

Part no.	08245006
EAN/GTIN	4250928470232
Packing unit	10 pcs
Quantity unit	pcs
Weight	0,418 kg/pc
Product group	02-085
Price unit	1

QR code

Certification

TSP®

CE

Specification

Recommended accessories	OPTI-Lock M10x15

Technical data

Material	Steel
Surface	Zinc-Nickel
Corrosion category	C4 high / C5 medium
Surrounding area	Indoor and outdoor areas

Product details

Material thickness	5 mm
Width material	36 mm
Length wing 1	90 mm
Length wing 2	90 mm
Angle β	- °

MEFA Befestigungs- und Montagesysteme GmbH | Schillerstraße 15 | 74635 Kupferzell
+ 49 7944 64 0 | info@mefa.de | www.mefa.de