Profile rail C-profile Stex 35 / 35 / 1 mm L= 3 m pre-galv.

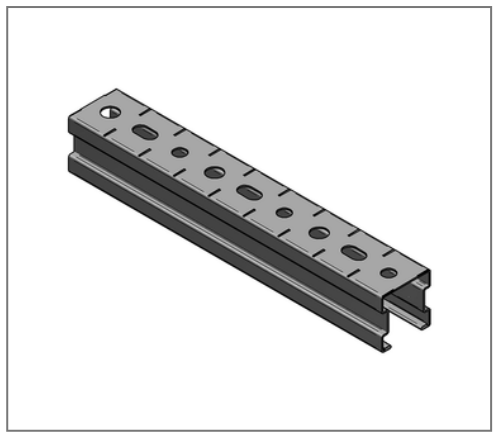

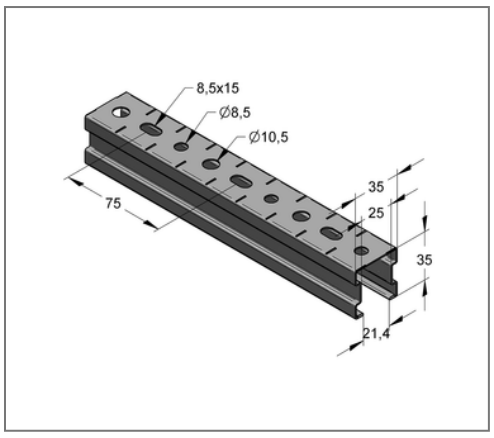

Commercial details

Part no.	1273539
EAN/GTIN	4250928424440
Packing unit	36 m
Bundle	378 m
Quantity unit	m
Weight	1,03 kg/m
Product group	02-127
Price unit	1

QR code

Certification

Specification

Application area	Lightweight profile rail with quick connection option.
Specification	Marking for fit-up aid and to cut rails
Type of attachment	glide fast connection

Technical data

Material	Steel
Material type	S250
Surface	pre-galvanized
Corrosion category	C2 very high
Surrounding area	Indoor area

Product details

Width	35 mm
Height	35 mm
Thickness	1 mm
Length	3 m
Hole-Ø	8,5 mm
Hole diameter 1	8,5 mm
Hole diameter 2	10,5 mm
Elongated hole	8,5x15 mm
Area (least cross section of the profile rail)	1,03 cm^2
Axial angular impulse I_Y	1,86 cm4
Axial angular impulse I_Z	2,21 cm4
Grid dimension	25 mm
Rail slot width	21 mm

Remark

Notice	Full bundles, only

MEFA Befestigungs- und Montagesysteme GmbH | Schillerstraße 15 | 74635 Kupferzell
+ 49 7944 64 0 | info@mefa.de | www.mefa.de

Product details

Centroid distance eo	1,72 cm
Centroid distance eu	1,78 cm
Centroid distance ez	1,75 cm
Elastic limit	250 N/mm²
Radius of inertia iy	1,34 cm
Radius of inertia iz	1,46 cm
Section modulus W_Y	1,04 cm³
Section modulus W_Z	1,26 cm³

MEFA Befestigungs- und Montagesysteme GmbH | Schillerstraße 15 | 74635 Kupferzell
+ 49 7944 64 0 | info@mefa.de | www.mefa.de