Profile rail C-profile 45 / 45 / 2,5 mm L= 6 m pre-galv.

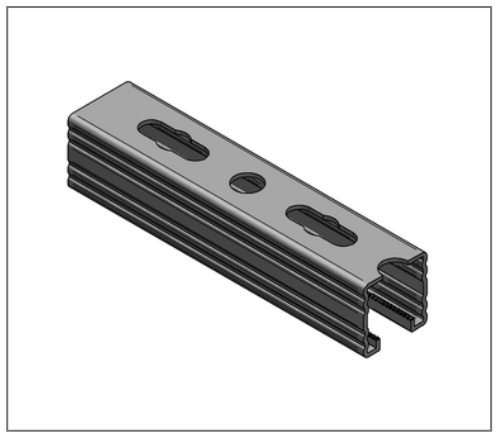

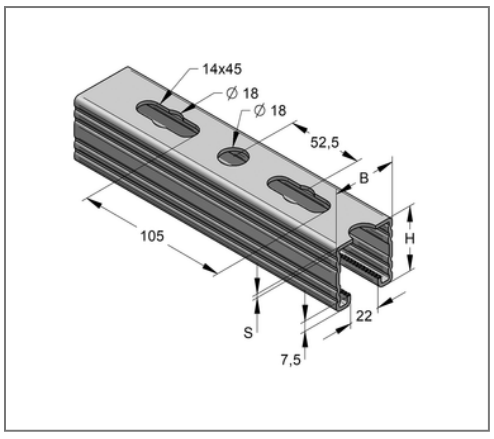

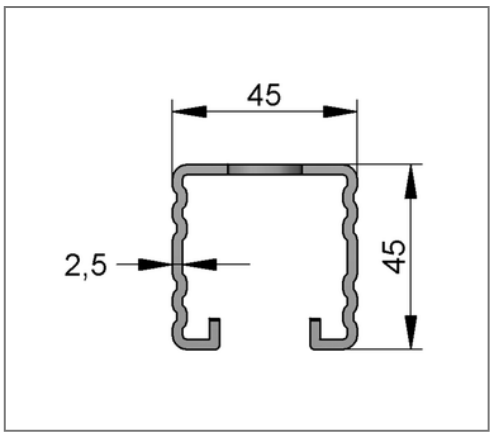

Commercial details

Part no.	0820456251
EAN/GTIN	4250928448095
Packing unit	30 m
Bundle	360 m
Quantity unit	m
Weight	2,96 kg/m
Product group	02-082
Price unit	1

QR code

Certification

MPA approved

Specification

Application area	Medium weight mounting rail with quick connection option.
Specification	Toothed profile.
Type of attachment	form-locking connection

Technical data

Material	Steel
Material type	S250
Surface	pre-galvanized
TSP	no
Corrosion category	C2 very high
Surrounding area	Indoor area

Product details

Width	45 mm
Height	45 mm
Thickness	2,5 mm
Length	6 m
Hole-Ø	18,00 mm
Elongated hole	14x45 mm
Expansion elongated hole	18,0 mm
Area (least cross section of the profile rail)	3,53 cm^2
Axial angular impulse I_Y	8,81 cm4
Axial angular impulse I_Z	12,69 cm4
Grid dimension	52,5 mm
Rail slot width	22 mm

Remark

Notice	Full bundles, only

MEFA Befestigungs- und Montagesysteme GmbH | Schillerstraße 15 | 74635 Kupferzell
+ 49 7944 64 0 | info@mefa.de | www.mefa.de

Product details

Centroid distance eo	2,19 cm
Centroid distance eu	2,31 cm
Centroid distance ez	2,25 cm
Elastic limit	250 N/mm²
Radius of inertia iy	1,58 cm
Radius of inertia iz	1,90 cm
Section modulus W_Y	3,80 cm³
Section modulus W_Z	5,64 cm³

MEFA Befestigungs- und Montagesysteme GmbH | Schillerstraße 15 | 74635 Kupferzell
+ 49 7944 64 0 | info@mefa.de | www.mefa.de