Console C-profile 45/45 L= 525 mm Plate vertical hot-dip galv.

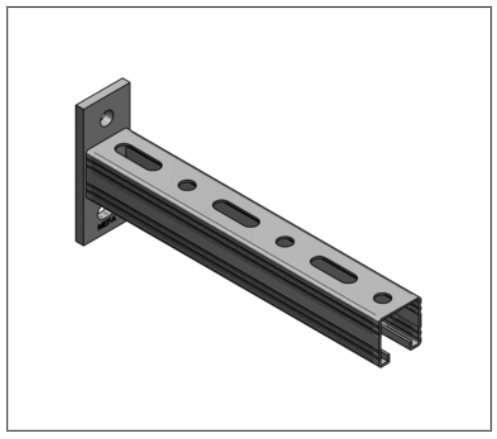

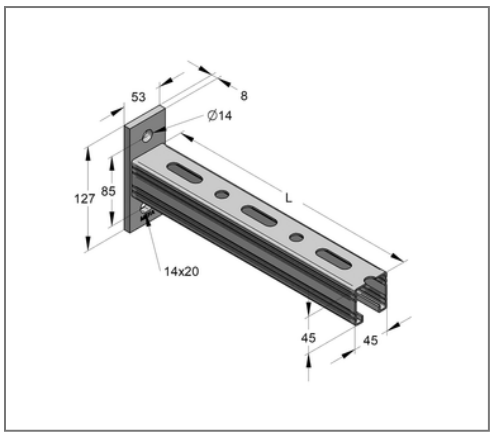

Commercial details

Part no.	180450525/fvz
EAN/GTIN	4250928448262
Packing unit	10 pcs
Quantity unit	pcs
Weight	1,80 kg/pc
Product group	02-083
Price unit	1

QR code

Certification

TSP®

Specification

Application area	Console for the production of cantilever structures for the support of suspended and standing pipe loads.

Technical data

Material	Steel
Surface	hot-dip galvanized
Corrosion category	C4 high / C5 medium
Surrounding area	Indoor and outdoor areas

Product details

Width plate	53 mm
Length plate	127 mm
Hole distance	85 mm
Plate thickness	8 mm
Width profile	45 mm
Profile height	45 mm
Length console L	525 mm
Elongated hole plate	14x20 mm
Load F1	1,99 kN
Load F2	1 kN
Load q0	3,79 kN/m
Profile thickness	2 mm

MEFA Befestigungs- und Montagesysteme GmbH | Schillerstraße 15 | 74635 Kupferzell
+ 49 7944 64 0 | info@mefa.de | www.mefa.de